XVD-302

Next-Gen Modular AI Dashcam

Xirgo's XVD-302 is a single-SIM dashcam solution that provides road-facing video, driver-facing video and vehicle telematics in a compact, modular package that is Connected Vehicle Rule (CVR) ready for U.S. installs. It utilizes AI to empower fleets to help prevent collisions, defend against claims, and coach drivers with more insights. With the optional OBDPRO smart cable, OEM data is fused with video events. Powered by a next-generation AI platform, the full ADAS and DMS suite runs concurrently with Live Stream and Guard Mode, enabling vehicle surveillance even when the ignition is off. Engineered to accept a variety of add-on driver-facing cameras and an optional OBDPRO smart cable — plus cloud pairing to Xirgo's multicam hardware for up to 6-channel unified video — the XVD-302 is flexible to upgrade with evolving needs. Compatible with Xirgo's KP2 dashcam mount, the XVD-302 is truly a next-generation all-in-one solution that provides seamless plug-and-play upgradability.

HIGHLIGHTS

Next-Gen AI Platform
More robust Edge AI and U.S. CVR-ready

OBDPRO Smart Cable (Optional)
Robust OEM CAN vehicle data fused with video

3-in-1 Modular Design
Road video, driver video and vehicle telematics

Quick Windshield Install
Drop-in upgrade for KP2 with quick installation

FEATURES

- **ADAS event detection**: Road-facing camera enables in-cab alerts for tailgating, forward collision, lane departure, pedestrian/cyclist, posted speed*, stop sign* and more
- **DMS event detection**: Driver-facing camera detects distraction, fatigue/drowsiness, phone use and more
- **Modular hardware**: Swappable driver camera, OBDPRO cable for OEM data (and other cable options available) and cloud pairing with other Xirgo multicam devices
- **Live Stream:** Remote on-demand access to live video streaming for real-time visibility and situational awareness
- **Guard Mode:** Parked surveillance mode that alerts for potential theft and tamper, based on configurable motion detections such as bump and shock
- **Plug-and-play self-install:** Self-adhesive windshield mounting bracket and app-guided setup for a faster install
- **Highly configurable:** Events, recording policy and AI sensitivity can all be fine-tuned for unique safety needs
- **Visible LED alerts:** Provides visual cues of alerts and device operation

*Feature available in the U.S. and Australia only.

XVD-302 TECHNICAL SPECIFICATIONS — NORTH AMERICA

Mechanical	Dimensions (including bracket)	5.04" × 3.30" × 2.18" (128 × 84 × 55 mm)
	Weight (without bracket)	10.0 oz (282 g)
	Housing Material	Black plastic (polycarbonate)
	Mounting Method	Mounting bracket with adhesive pad
Electrical	Input Voltage	12V/24V DC Nominal, 10–32V DC range through modular mounting bracket
	Supercapacitor	Internal
	Maximum Power Draw	1.5 A
	Processor	Octa-core ARM
	Data Storage	1x MicroSD slot, 64 GB card included, 1 TB maximum
Optical	Road-facing Camera	Supports 1080p and 720p resolutions Up to 30 FPS FOV: Diagonal 140°, Horizontal 115°, Vertical 60°
	Optional Driver-facing Camera	Supports 1080p and 720p resolutions Up to 30 FPS FOV: Diagonal 130°, Horizontal 104°, Vertical 56°
User Interface	Panic Button	Integrated into unit or via optional Bluetooth® panic button
	Status LEDs	Network (Green), Recording (Blue), Warning (Red)
	Speaker	Integrated x1
	Microphones	Integrated x2
Environmental	Operating Temperature	-10° to +60° C (14° to 140° F)
	Recommended Storage Temperature	-20° to +70° C (-4° to 158° F)
Communications	Cellular	4G LTE, 3G Fallback, 2G Fallback (EA version only)
	Cellular Interfaces	LTE Cat 4
	Cellular Bands	North America: 4G LTE: B2, B4, B5, B7, B12, B13, B14, B17, B25, B26, B41, B66, B71 EMEA: 4G LTE: B1, B2, B3, B4, B5, B7, B8, B20, B28, B38, B39, B40, B41 3G UMTS: B1, B2, B4, B5, B8 2G GPRS: 850/900/1800/1900 MHz
	SIM Card	4FF slot
	Wi-Fi®	2.4/5 GHz, 802.11a/b/g/n/ac
	Bluetooth®	5.0 LE
Positioning & Sensing	Constellation Support	GPS/QZSS L1, GLONASS L1, BeiDou B1, Galileo E1
	Accuracy	<2.5 m CEP50 Open Sky
	Sensors	3-Axis Accelerometer, 3-Axis Gyroscope
Compliance	North America	FCC, IC, PTCRB, AT&T Network Optimized (pending), Verizon, T-Mobile (pending), Rogers (pending), Bell Canada (pending)
	Global	CE, UKCA, E-mark, RCM, RoHS, RED DA, REACH
Warranty	Two Years	

Xirgo and the Xirgo logo are either trademarks or registered trademarks of Xirgo Holdings, Inc. in the United States and/or other countries. Bluetooth is either a trademark or registered trademark of Bluetooth SIG in the United States and/or other countries. Wi-Fi is either a trademark or registered trademark of the Wi-Fi Alliance in the United States and/or other countries. Other trademarks, registered trademarks and trade names may be used in this document to refer to either the entities claiming the marks and names or their products. Xirgo disclaims any proprietary interest in the marks and names of others. Xirgo is not responsible for errors in typography or photography.

*Posted speed and stop sign detection available in the U.S. and Australia only.

© 2026 Xirgo Holdings, Inc. All Rights Reserved.

XVD-302 MODULAR DESIGN

Modular design for different driver-facing camera options

XVD-302
Road- and driver-facing cameras

XVD-302
Road-facing camera and blank for second camera

XVD-302
Road-facing camera and remote camera capability

XVD-302 DRAWINGS

SIDE VIEW

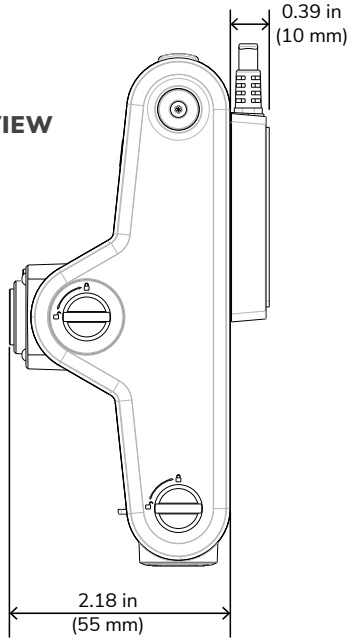

FRONT VIEW

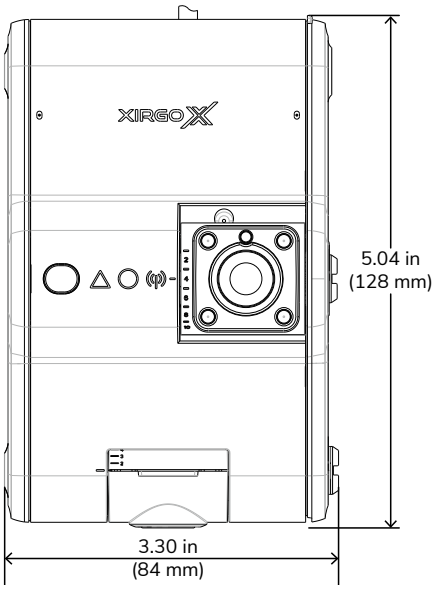

BOTTOM VIEW

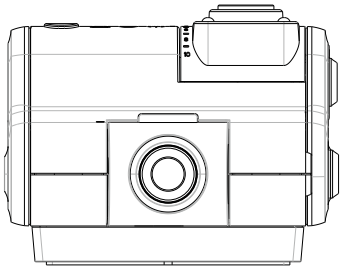

© 2026 Xirgo Holdings, Inc. All Rights Reserved.